DC TO AC SOLID STATE RELAY - MODEL 801

25AMP- MODEL 801 ZDA 48 25 01 WITH "G-68" H.S.

35mm Plastic Din Rail to SSR
10kV isolation

Weight: 100gms SSR + 95gms Heat sink

Model 801 - 25Amp
Zero Cross Over SSR
Input : 4-32VDC/4-16mA
Input LED Indication : Green
Output : 24-480VAC (47-63 Hz)
PIV : 800Vpk
I^2T : 340A²S for 9.6mS
Body isolation : 4kV for 1min
I/P. to O/P. isolation : 6kV for 1min
Load Current : 20AMP @55 °C
With Heat Sink G-68+Din

40AMP-MODEL 801 ZDA 48 40 01 WITH "G-68" H.S.

35mm Plastic Din Rail to SSR
10kV isolation

Weight: 100gms SSR + 95gms Heat sink

Model 801 - 40Amp
Zero Cross Over SSR
Input : 4-32VDC/4-16mA
Input LED Indication : Green
Output : 24-480VAC (47-63 Hz)
PIV : 800Vpk
I^2T : 880A²S for 9.6mS
Body isolation : 4kV for 1min
I/P. to O/P. isolation : 6kV for 1min
1.) Load Current : 22AMP @ 55 °C
With Heat Sink G-68+DIN
2.) Load Current :32AMP @ 55 °C
With Heat Sink B-48+DIN

Model 801 - Dimension

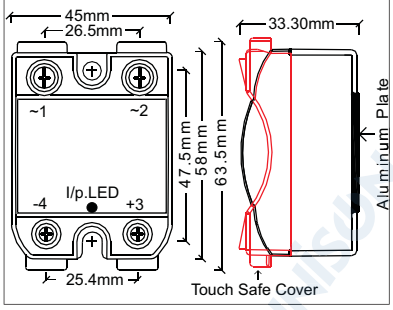

DC to AC - Circuit Diagram

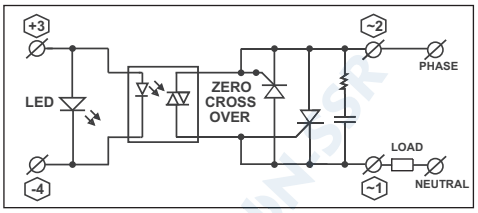

- ⇨ INBUILT Snubber for protect the Harmonic & Power Factor.
- ⇨ INBUILT TVS protect Surge Voltage.

LEAD - FREE
RoHS
COMPLIANT

Approved By
CE
EN-60947-5-1